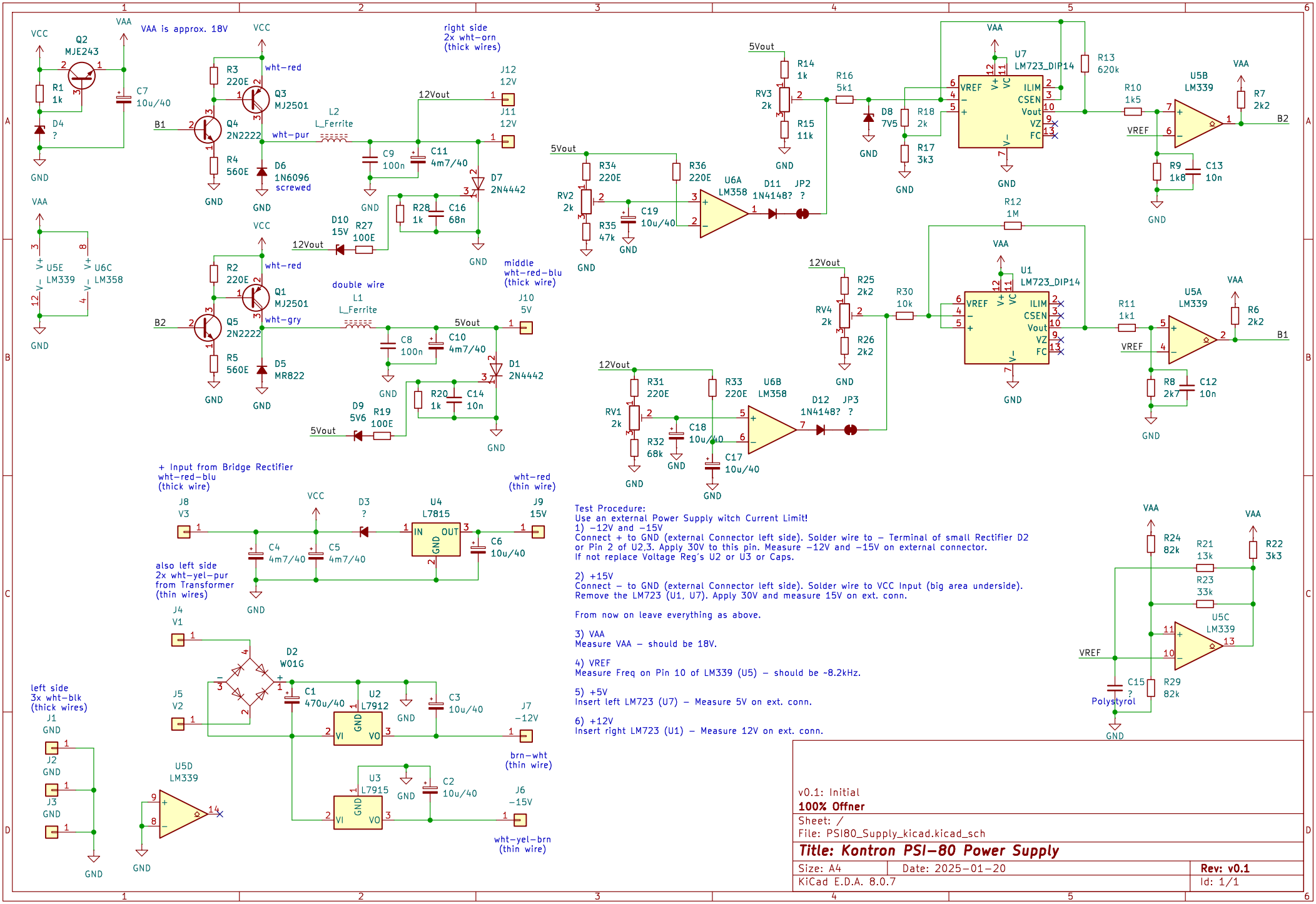
VAA is approx. 18V
right side
2x wht-orn
(thick wires)
middle
wht-red-blu
(thick wire)
double wire
+ Input from Bridge Rectifier
wht-red-blu
(thick wire)
wht-red
(thin wire)
also left side
2x wht-yel-pur
from Transformer
(thin wires)
left side
3x wht-blk
(thick wires)
brn-wht
(thin wire)
wht-yel-brn
(thin wire)
Test Procedure:
Use an external Power Supply witch Current Limit!
1) -12V and -15V
Connect + to GND (external Connector left side). Solder wire to - Terminal of small Rectifier D2
or Pin 2 of U2,3. Apply 30V to this pin. Measure -12V and -15V on external connector.
If not replace Voltage Reg's U2 or U3 or Caps.
2) +15V
Connect - to GND (external Connector left side). Solder wire to VCC Input (big area underside).
Remove the LM723 (U1, U7). Apply 30V and measure 15V on ext. conn.
From now on leave everything as above.
3) VAA
Measure VAA - should be 18V.
4) VREF
Measure Freq on Pin 10 of LM339 (U5) - should be ~8.2kHz.
5) +5V
Insert left LM723 (U7) - Measure 5V on ext. conn.
6) +12V
Insert right LM723 (U1) - Measure 12V on ext. conn.
v0.1: Initial
100% Offner
Sheet: /
File: PSI80_Supply_kicad.kicad_sch
Title: Kontron PSI-80 Power Supply
Size: A4
Date: 2025-01-20
Rev: v0.1
KiCad E.D.A. 8.0.7
Id: 1/1